Angle Logic!

Posted by Billabong - 12 Nov 2012 04:13

Trying to get my head around how I mount and setup tapered knives to achieve a bevel of the same width on each side.

By tapered, I mean a knife that doesn't have sides parallel to each other where the WEPS clamps.

A wide spine with flat sides evenly tapering to a thin edge, then a bevel.

This picture (although not taken for this purpose) shows a correct illustration of angles being the same on each side.

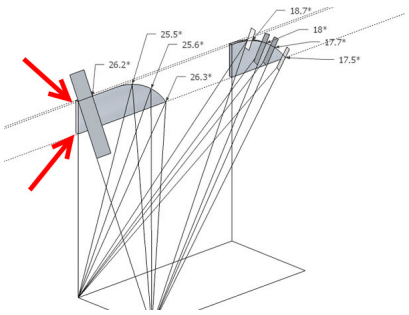

But it uses a rectangular blade.

Of course it would still be the same if you were able to clamp a tapered blade in a perfect vertical plane, but the WEPS has trouble doing this.

As the left side of the clamp always remains fixed and perpendicular to the angle bar, it pulls the left face of the knife against it when clamped, while the right side of the clamp adjusts outward to achieve a tight grip on the knife face.

If you look under the clamped knife (between the left and right clamps) you will see a gap that tapers from narrow at the top to wider on the bottom.

Fine, you say, it's a tapered blade?

You should also notice the right clamp is protruding out some distance at the bottom, no surprises once again?

But this also means the knife is angled to the left, if you look along the blade from the handle you can see this.

Now, if I set my angles to 20˚ on each side with my angle guage, (like every one does) I will get a narrower bevel on the left side.

Even though I will achieve a correctly angled edge.

The only way I can see to obtain my goal is to somehow make the knife perfectly vertical in the clamp or deliberately have different angles on each side.

To get 20˚ with even bevel, then perhaps I need 19.5˚ on the left (less) and 20.5˚ on the right (more)?

I'm guessing smaller changes would apply.

How to I calculate this while a knife is clamped?

Has this already been discussed somewhere before?

Should I just go outside and smell the roses instead?

==========

Re: Angle Logic!
Posted by mark76 - 12 Nov 2012 04:35

I don't quite understand the problem you describe. If the problem is that the knife isn't perfectly vertical in the vise, try to clamp it using a piece of chamois. (Chamois? According to my dictionary this is an animal . I mean the soft leathery stuff.)

If the problem is that the knife is quite wide and that the right clamp protrudes to the right so much that the angle bar doesn't indicate the correct angles anymore, use an angle cube.

If it's yet another problem, please explain . Smelling roses is always a good idea. (Man, it's getting winter where I live, almost freezing outside. Lucky you.)

==========

Re: Angle Logic!
Posted by Billabong - 12 Nov 2012 04:49

---

mark76 wrote:

I don't quite understand the problem you describe. If the problem is that the knife isn't perfectly vertical in the vise, try to clamp it using a piece of chamois.

That's basically the problem, I would need to put chamois on the left side only and guesstimate.

==========

Re: Angle Logic!

Posted by mark76 - 12 Nov 2012 05:07

I still don't quite get it. The idea of chamois is that it is quite flexible and that it compresses at points where needed and not at other points. So it helps in getting a fully flat ground blade vertical. Foam tape might help, too. I use that myself. See here .

Why would you need to put chamois on the left side only? Or is the problem that your knife tapers only on one side?

Which shape does your blade have?

==========

Re: Angle Logic!

Posted by Billabong - 12 Nov 2012 05:15

Apologies, I will need to post some sketches to explain.

Not in a position to create those at the moment.

The left side of the clamp is perpendicular to the crossbar, and remains that way.

The right side is not when clamping a tapered (triangular) knife.

Left Side!

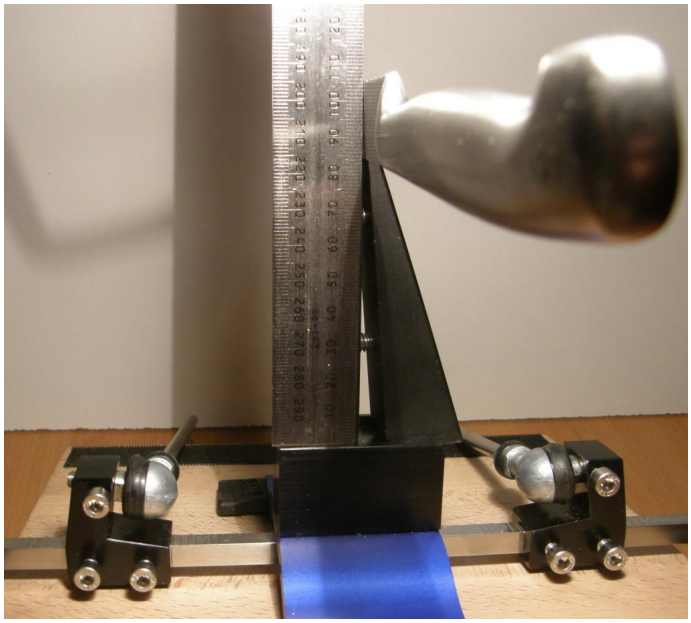

Right Side!

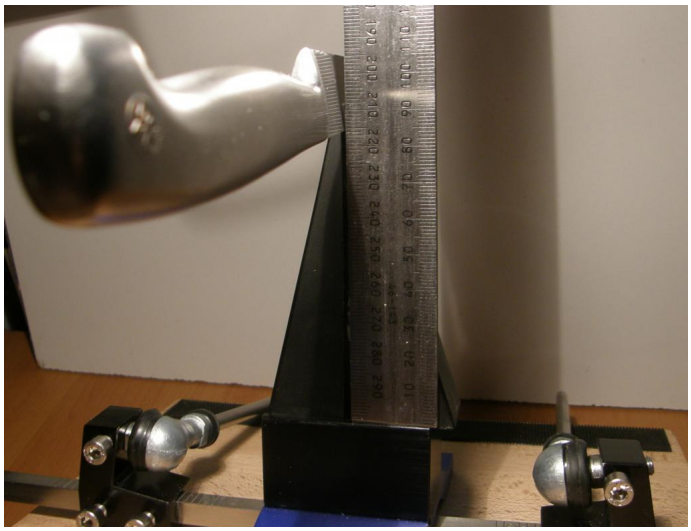

==========

Re: Angle Logic!

Posted by Billabong - 12 Nov 2012 08:12

_____

I added some "slightly exagerated" pics.

You see the gap against the blade on the right?

How can the knife be located vertically, perpendicular to the crossbar?

Central, evenly,

==========

Re: Angle Logic!
Posted by mark76 - 12 Nov 2012 08:22

I see. The knife is simply not straight in the vise. Foam tape or chamois should really help you, I think. Why doesn't it work?

Big knives can pose other challenges (and it looks like a big knife), but there's always a way around …

==========

Re: Angle Logic!
Posted by Billabong - 12 Nov 2012 08:37

So I pack it with foam tape and look along the edge?

==========

Re: Angle Logic!
Posted by mark76 - 12 Nov 2012 08:47

Yeah. Only at the top of the vise, so the knife remains vertical. Clay explained it here .

==========

Re: Angle Logic!
Posted by Billabong - 12 Nov 2012 08:53

Perhaps Clay can comment on this one?

That link seems to be for a different purpose?

==========