Angle Logic!

Posted by Billabong - 12 Nov 2012 04:13

Trying to get my head around how I mount and setup tapered knives to achieve a bevel of the same width on each side.

By tapered, I mean a knife that doesn't have sides parallel to each other where the WEPS clamps.

A wide spine with flat sides evenly tapering to a thin edge, then a bevel.

This picture (although not taken for this purpose) shows a correct illustration of angles being the same on each side.

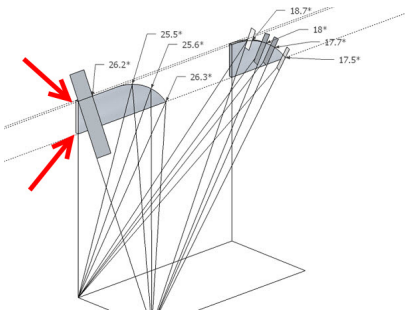

But it uses a rectangular blade.

Of course it would still be the same if you were able to clamp a tapered blade in a perfect vertical plane, but the WEPS has trouble doing this.

As the left side of the clamp always remains fixed and perpendicular to the angle bar, it pulls the left face of the knife against it when clamped, while the right side of the clamp adjusts outward to achieve a tight grip on the knife face.

If you look under the clamped knife (between the left and right clamps) you will see a gap that tapers from narrow at the top to wider on the bottom.

Fine, you say, it's a tapered blade?

You should also notice the right clamp is protruding out some distance at the bottom, no surprises once again?

But this also means the knife is angled to the left, if you look along the blade from the handle you can see this.

Now, if I set my angles to 20˚ on each side with my angle guage, (like every one does) I will get a narrower bevel on the left side.

Even though I will achieve a correctly angled edge.

The only way I can see to obtain my goal is to somehow make the knife perfectly vertical in the clamp or deliberately have different angles on each side.

To get 20˚ with even bevel, then perhaps I need 19.5˚ on the left (less) and 20.5˚ on the right (more)?

I'm guessing smaller changes would apply.

How to I calculate this while a knife is clamped?

Has this already been discussed somewhere before?

Should I just go outside and smell the roses instead?

==========

Re: Angle Logic!
Posted by mark76 - 12 Nov 2012 09:49

_____

PhilipPasteur wrote:

Not sure if you did it just to emphasize the problem, but your bottom screw is definitely cranked in too far.

That's a good point. First tighten the top screw, only then the bottom one.

==========

Re: Angle Logic!
Posted by PhilipPasteur - 12 Nov 2012 09:59

_____

Billabong wrote:

That link seems to be for a different purpose?

Hmmmm. I looked at the info that was linked. It was pretty specifically about how to properly clamp a FFG (triangular) blade in the WEPS properly. Isn't that what you want to be able to do?

What other purpose did you think it was for?

Phil

==========

Re: Angle Logic!

Posted by Billabong - 12 Nov 2012 10:49

_____

mark76 wrote:

PhilipPasteur wrote:

Not sure if you did it just to emphasize the problem, but your bottom screw is definitely cranked in too far.

That's a good point. First tighten the top screw, only then the bottom one.

I always do, is there another way?

The top screw sets the clamp angle and the bottom tightens the grip.

I pinch the clamp from above to match the blade angle on both sides, then bring the top screw in to gently hold that grip.

Then tightly secure it all with the bottom screw, which spreads the clamp out at the bottom and therefore in at the top.

Is this wrong?

edit - Can I suggest you kind people try this, you will see the knife leans to the left?

It's no surprise, I'm just trying to work out the best way to counter this so I get an even bevel.

Not angle, bevel width the same on both sides.

==========

Re: Angle Logic!
Posted by mark76 - 12 Nov 2012 11:05

_____

Billabong wrote:

Is this wrong?

No, that sounds right. But I still don't understand your problem 🙂

==========

Re: Angle Logic!
Posted by Billabong - 12 Nov 2012 11:12

_____

I would be very surprised if Clay doesn't know what I'm talking about here.

It's something I am sure he is working on.

==========

Re: Angle Logic!
Posted by wickededge - 12 Nov 2012 11:21

_____

Billabong wrote:

I would be very surprised if Clay doesn't know what I'm talking about here.

It's something I am sure he is working on.

Maybe... 🙂

==========

Re: Angle Logic!
Posted by cbwx34 - 12 Nov 2012 11:29

Billabong wrote:

I pinch the clamp from above to match the blade angle on both sides, then bring the top screw in to gently hold that grip.

Then tightly secure it all with the bottom screw, which spreads the clamp out at the bottom and therefore in at the top.

Is this wrong?

edit - Can I suggest you kind people try this, you will see the knife leans to the left?

It's no surprise, I'm just trying to work out the best way to counter this so I get an even bevel.

Not angle, bevel width the same on both sides.

On FFG blades, don't pinch the clamp to match the sides. Hold the blade vertical, and tighten the top screw. If you don't pinch it, the clamp will grab at the base on both sides. Then tighten the bottom screw to secure the blade.

If you use a thin piece of leather (I like), or some foam tape (I didn't like as much, I could get it to slip, but others have had success), it will help hold it. But, you can actually clamp it without anything.

I took a couple of pics.... the first one shows the blade clamped with equal spacing on both sides (you have to look at it for a sec... maybe a little too close)... the 2nd one shows the position of the clamp sides on the same blade. No leather or foam, and the blade is tight.

==========

Re: Angle Logic!
Posted by Billabong - 12 Nov 2012 11:36

Mark, if you pull your clamp off its mount.

So you have a left and a right side.

Then clamp any tapered knife so the sides touch the clamp "flush" top and bottom, no gaps.

Now sit the clamped knife on a bench, with the left side (base) of the clamp flat.

Your knife will have a lean to the left.

But, if you were able to attach this clamped knife back onto the mount with the knife at a perfect vertical, then life would be good!

==========

Re: Angle Logic!

Posted by PhilipPasteur - 12 Nov 2012 11:48

Billabong wrote:

mark76 wrote:

PhilipPasteur wrote:

Not sure if you did it just to emphasize the problem, but your bottom screw is definitely cranked in too far.

That's a good point. First tighten the top screw, only then the bottom one.

I always do, is there another way?

The top screw sets the clamp angle and the bottom tightens the grip.

I pinch the clamp from above to match the blade angle on both sides, then bring the top screw in to gently hold that grip.

Then tightly secure it all with the bottom screw, which spreads the clamp out at the bottom and therefore in at the top.

Is this wrong?

edit - Can I suggest you kind people try this, you will see the knife leans to the left?

It's no surprise, I'm just trying to work out the best way to counter this so I get an even bevel.

Not angle, bevel width the same on both sides.

I tighten the top screw down hard and use some kind of material to help center the blade (as mentioned). The less you have to tighten the bottom screw the less potential you have of moving the blade off center. This has been discussed at length and techniques to mitigate the problem discovered. One approach is to do what I do, it works (did you even read my previous post).

Clay has discussed several design changes that might take some of the currently required attention to detail out of the process. These have ranged from mounting some kind of rubber tips to the vise to making a vice where both jaws are moveable and self centering. I guess my point is that you can position the knife so that you get equal bevels with the current system if you develop the proper technique. Some of those techniques are illustrated in Clay's video, I offered one that works. If you check the forum, you will likely find others that have worked for other members. Point is it can be done.

==========

Re: Angle Logic!

Posted by Billabong - 12 Nov 2012 12:01

PhilipPasteur wrote:

(did you even read my previous post).

I was outside smelling roses, how do you post while you are offline?

I will read all of this and absorb the value.

Thanks to all!

I might put on my inventors hat?

A question for Clay, what does "Made In China" printed on the WEPS box apply to?

The box?

==========