Angle Logic!

Posted by Billabong - 12 Nov 2012 04:13

Trying to get my head around how I mount and setup tapered knives to achieve a bevel of the same width on each side.

By tapered, I mean a knife that doesn't have sides parallel to each other where the WEPS clamps.

A wide spine with flat sides evenly tapering to a thin edge, then a bevel.

This picture (although not taken for this purpose) shows a correct illustration of angles being the same on each side.

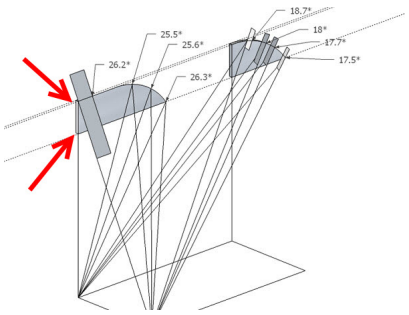

But it uses a rectangular blade.

Of course it would still be the same if you were able to clamp a tapered blade in a perfect vertical plane, but the WEPS has trouble doing this.

As the left side of the clamp always remains fixed and perpendicular to the angle bar, it pulls the left face of the knife against it when clamped, while the right side of the clamp adjusts outward to achieve a tight grip on the knife face.

If you look under the clamped knife (between the left and right clamps) you will see a gap that tapers from narrow at the top to wider on the bottom.

Fine, you say, it's a tapered blade?

You should also notice the right clamp is protruding out some distance at the bottom, no surprises once again?

But this also means the knife is angled to the left, if you look along the blade from the handle you can see this.

Now, if I set my angles to 20˚ on each side with my angle guage, (like every one does) I will get a narrower bevel on the left side.

Even though I will achieve a correctly angled edge.

The only way I can see to obtain my goal is to somehow make the knife perfectly vertical in the clamp or deliberately have different angles on each side.

To get 20˚ with even bevel, then perhaps I need 19.5˚ on the left (less) and 20.5˚ on the right (more)?

I'm guessing smaller changes would apply.

How to I calculate this while a knife is clamped?

Has this already been discussed somewhere before?

Should I just go outside and smell the roses instead?

==========

Re: Angle Logic!
Posted by KenBuzbee - 12 Nov 2012 12:10

_____

I understand exactly what you are talking about. I did that (blade leaning left of center) to one of my kitchen knives I wasn't paying close enough attention to.

The post Mark gave you discussing clamping was spot on. The foam tape trick, while maybe not perfect is pretty darned close. Of course, a clamp that handled this would be better yet but it is, as others have said, possible to get very close using foam, chamois... whatever to clamp the blade.

Ken

==========

Re: Angle Logic!
Posted by Billabong - 12 Nov 2012 12:34

_____

KenBuzbee wrote:

I understand exactly what you are talking about. I did that (blade leaning left of center) to one of my kitchen knives I wasn't paying close enough attention to.

Thanks Ken and Mark, cbw etc.

I thought I was going mad trying to explain this.

All those years using a Lansky and wondering how to mount it securely without this very problem getting in the way.

==========

Re: Angle Logic!
Posted by mark76 - 12 Nov 2012 19:48

_____

Billabong wrote:

A question for Clay, what does "Made In China" printed on the WEPS box apply to?

The box?

Hey Chris, we're both not from the USA. Do you realize how sensitive this is over there? I once made a joke about it and I got the impression it was not really appreciated. Ah well, they need to grow up too...

==========

Re: Angle Logic!
Posted by Billabong - 12 Nov 2012 20:14

_____

mark76 wrote:

Billabong wrote:

A question for Clay, what does "Made In China" printed on the WEPS box apply to?

The box?

Hey Chris, we're both not from the USA. Do you realize how sensitive this is over there? I once made a joke about it and I got the impression it was not really appreciated. Ah well, they need to grow up too...

A karma hit, hey?

I can understand this doesn't sit too well with a lot of countries.

It's just expected now.

We have done very well selling our iron ore to them. (for now)

Us Aussies love American made stuff, can't get enough of it.

We pay no tax on imports below a value of $1,000, over that and GST (Goods & Services Tax) kicks in. (10%)

I am curious what bits Clay has made in China, that's why I said "the box".

notes my karma level and watches closely

==========

Re: Angle Logic!

Posted by Billabong - 18 Nov 2012 03:04

PhilipPasteur wrote:

I then tighten the top screw down hard while making sure the blade is centered. Then I tighten the bottom screw, but no more that I have to to keep the knife from movingj, just snug. I try to keep the gap between the fixed and movable vice jaws equal top and bottom.

Phil

Phil, you are clamping a point on the knife on each side by eye.

In a perfect world, the clamp would be flat against the knife on each side.

The clamp would simply follow the angle of the knife.

The gap on the top and bottom would reflect this, they wouldn't be equal unless the knife is rectangular.

Each time you setup your knife, it would be the same.

The official instructions.

Step 5:

"Tighten the top screw of the Vise until the knife is lightly held in place, then tighten the bottom screw until the knife is firmly held in place. Do not over tighten! Remove the Depth Key and Alignment Guide from the Vise."

www.wickededgeusa.com/index.php?option=c...ctions&Itemid=88

The fact that the person setting the knife up has to "allow" for this left side "pulling" is to be expected.

As the left side of the clamp "always" remains vertical.

I have packed the left side only to acheive a vertical mounted knife.

I'm thinking of using a feeler guage set to shim the left.

Then I can have a record for setting up next time.

If the vise clamp could squeeze both sides of the knife at it's correct angles, it (the clamp) would then need to be able to rotate slightly to the right to be vertical.

I can see this problem being overcome one day, everything else is just a workaround for now.

If you don't admit there "is" a problem, then you will never try to fix it!

Thanks for all the input!

==========